HONDA

Introducing

Shine 125

Limited Edition

Shine 125

The new Shine 125 limited edition is designed for young, everyday riders, bringing a fresh premium touch to commuting. Available in Pearl Siren Blue Color, It features minimal gold and silver graphics, refined Shine branding on the tank, distinctive Shine125 badging, and stylish Pyrite Brown alloy wheels.

Iconic Look

New Stylish Shine Graphics

Stylish graphics elevate
the bike's dynamic appeal.

Pyrite Brown Alloy Wheels

Pyrite Brown alloy wheels enhance
road presence with a stylish look.

Stylish Front Chrome Visor

A stylish front visor with chrome garnish adds a striking look.

Aero-Type Fuel Cap

A sleek fuel cap design adds both style and practicality.

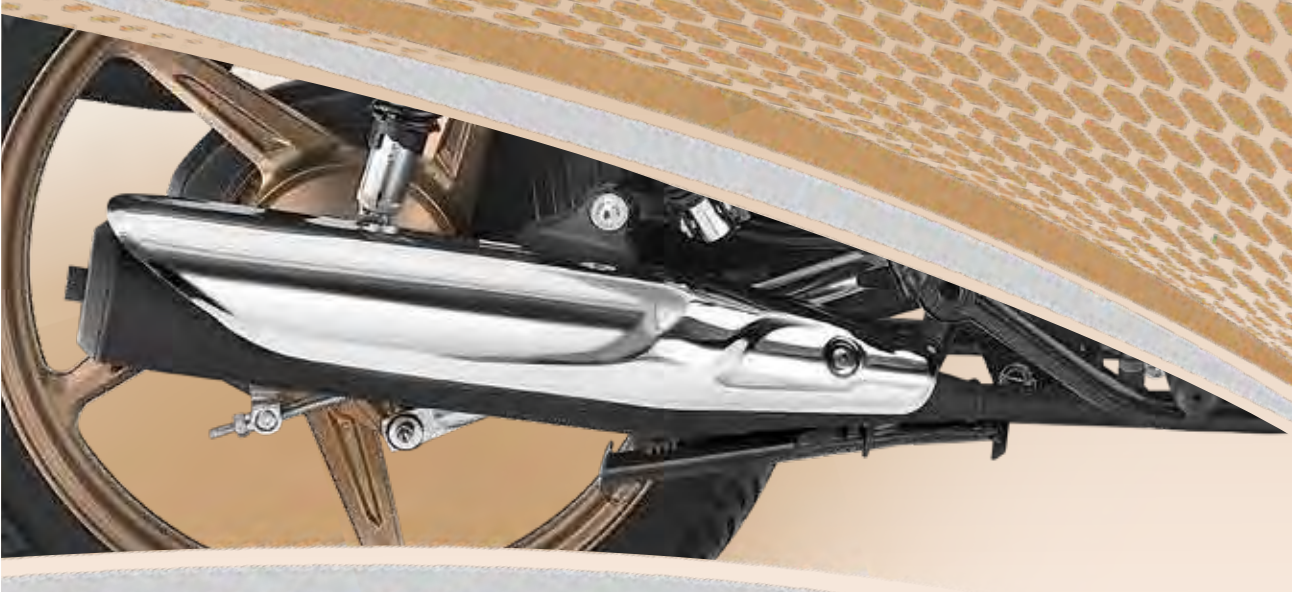

Attractive Chrome Muffler Cover

A chrome-plated exhaust muffler gives Shine an elegant stance, making it stand out in the crowd.

Premium Chrome Side Covers

Elegant chrome accents on the side covers enhance the Shine's premium stance.

Elegant Tail Lamp

A signature tail lamp gives the Shine a unique identity.

Smart Technology

New Fully Digital Meter

A premium Fully Digital Meter engineered for precision and efficiency. It offers live mileage indicator, average mileage tracking, range, service reminders, gear position display, digital clock, fuel level monitoring, and an eco-indicator delivering a seamless, data-driven riding experience.

Average Mileage

Range

Digital Clock

Live Mileage Indicator.

Service Reminders

Idling Stop System

Automatically shuts off the engine during short stops, improving fuel efficiency and making city rides effortless.

125cc BS VI compliant engine

A future-ready engine that delivers outstanding performance while being environmentally friendly.

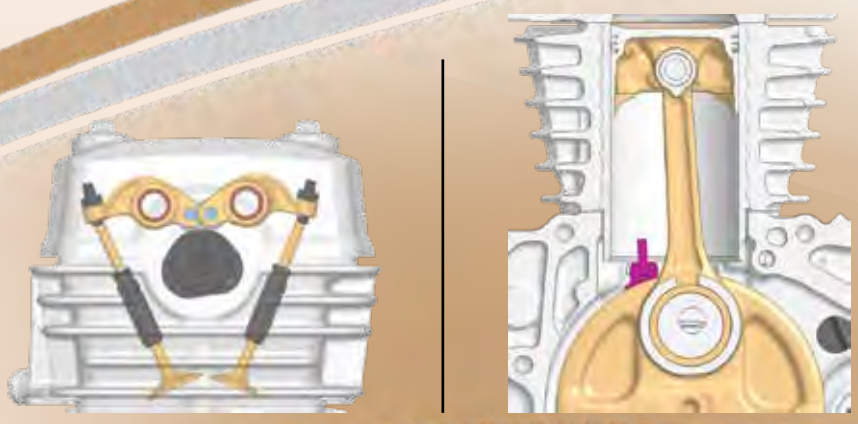

Friction Reduction

Piston cooling jet, offset cylinder, and rocker roller arm work together to minimise friction and maintain ideal engine temperature.

eSP
ENHANCED SMART POWER

Honda's Enhanced Smart Power (eSP) technology ensures top-notch performance and fuel efficiency by minimising friction.

Silent ACG Starter

Honda's advanced ACG starter motor eliminates gear meshing noise, ensuring a seamless start.

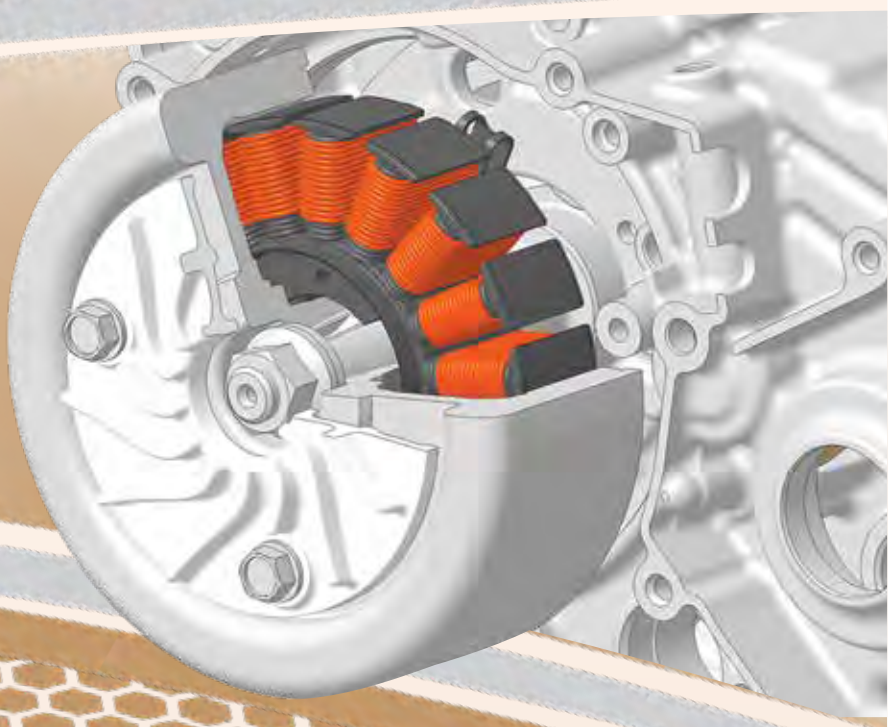

PGM-FI
FUEL INJECTION

The cutting-edge Fuel Injection System dynamically adjusts the air-fuel mix for optimised efficiency.

Effortless Comfort

15W USB-C Port

Enjoy your ride. It provides charging to your smartphone, power bank, and earphones on the go.

Honda
EXTENDED WARRANTY
10 YEAR* COVERAGE

3+ 7 Years Warranty Package

*Attractive 10-year warranty package, comprising 3 years standard and 7 years optional service warranty.

5-Speed Transmission

Enjoy a smooth yet thrilling ride with the 5-speed transmission.

CBS with Equalizer

The Combi-Brake System shortens braking distance and improves stability.

Integrated Headlamp Beam & Passing Switch

A smart single switch for easy toggling between high/low beam and passing signals.

Seamless Seat Tank Integration

Optimised seat and tank design enhance comfort and ground reach.

High Ground Clearance

162 mm ground clearance allows smooth passage over rough roads and potholes.

Long Wheelbase

A 1285 mm wheelbase enhances stability, especially at higher speeds.

5Ah MF Battery

High-capacity, maintenance-free battery supports DC headlamps and offers a longer lifespan.

Wider Rear Tyre

A 90 mm rear tyre provides superior grip and control while accelerating or braking.

Long & Comfortable Seat

A spacious 651 mm seat ensures comfort for both rider and pillion, ideal for long journeys.

Seal Chain

Low-maintenance, highly durable chain for a hassle-free ride.

Viscous Paper Filter

A low-maintenance air filter that requires replacement only every 18,000 km.

Side Stand Indicator with Engine Cut-off

Prevents engine start when the side stand is engaged, enhancing safety.

Technical specification

Body Dimensions

Length	2046 mm
Width	741 mm
Height	1116 mm
Wheel Base	1285 mm
Ground Clearance	162 mm
Kerb Weight	113 kg
Seat Length	651 mm
Seat Height	791 mm
Fuel Tank Capacity	10.5 L

Engine

Type	4 Stroke, SI, BS-VI Engine
Displacement	123.94 cc
Max Net Power	7.93 Kw @ 7500 rpm
Max Net Torque	11 N-m @ 6000 rpm
Fuel System	PGM-FI
Bore x Stroke	50.00 X 63.121
Compression Ratio	10.0:1
Starting Method	Self/Kick

Transmission

Clutch Type	Multiplate Wet Clutch
No. of Gears	5

Tyres & brakes

Tyre Size & Type (Front)	80/100-18 M/C 47P
Tyre Size & Type (Rear)	90/90-18 M/C 51P
Brake Type & Size (Front)	Disc-240 mm
Brake Type & Size (Rear)	Rear-130 mm

Frame & Suspension

Frame Type	Diamond Type
Front Suspension	Telescopic
Rear Suspension	Hydraulic type

Electricals

Battery	12V, 5Ah
Head Lamp	Halogen Bulb, DC

+The technical specifications and design of the vehicle may vary according to the requirements and conditions without any notice • Shine meets Bharat Stage VI norms • Product shown in the picture may vary from actual product available in the market • Accessories shown in the picture are not part of standard equipment. Conditions apply.

Vayalat Honda
Metro Pillar No: 997 - 998
Cochin
Tel: 7593817161
Mob: 0484-6623300